Work Order ID 81744

March-16-12 3:19:11 PM

81744

Item ID: D3687-3 **Accept** *N900040100* **Setup Start** *NS1*

Revision ID: **Stop** *NS2*

Item Name: MOUNT

Start Date: 16/03/2012 **Start Qty:** 8.00 *8* **Cust Item ID:**

Required Date: 23/04/2012 **Req'd Qty:** 8.00 *8* **Customer:**

Reference:

Approvals: **Process Plan:** MLJ **Date:** 12/03/15 **Tooling:** **Date:** **Run Start** *NR1*

QC: **Date:** **SPC (Y/N):** **Date:** **Stop** *NR2*

Sequence ID/ Work Center ID	Operation Description	Set Up/ Run Hours	Tool ID	Tool #	Plan Code	Accept Qty	Reject Qty	Reject Number	Insp. Stamp
Draw Nbr	**Revision Nbr**								
D3687	Rev C								
100		0.00							
100									
Outsource1	**Memo**	0.00							
Outsource process - Heat Treat	Send M174B3937X4750 For heat treating to CONDITION H-900(to become M174PHH900B3937X4750) FTU IN EXESS OF 190 KSI FTU IN EXESS OF 170 KSI CERTIFICATE IS REQUIRED								
105		0.00							
105									
Outsource5	**Memo**	0.00							
Outsource process - Machining	Issue P/O: 16478 Machine as per Dwg D3687 Possible Supplier:GlobusPrecision Conformity sheet required								

N/A 12-06-08

CL 12/03/19 8

Dart Aerospace Ltd

W/O:		WORK ORDER CHANGES					
DATE	STEP	PROCEDURE CHANGE	By	Date	Qty	Approval Chief Eng / Prod Mgr	Approval QC Inspector

Part No: _____ **PAR #:** _____ **Fault Category:** _____ **NCR:** Yes No **DQA:** _____ **Date:** _____

Resolution: _____ **Disposition:** _____ **QA: N/C Closed:** _____ **Date:** _____

NCR:		WORK ORDER NON-CONFORMANCE (NCR)						
DATE	STEP	Description of NC Section A	Corrective Action Section B			Verification Section C	Approval Chief Eng	Approval QC Inspector
			Initial Chief Eng	Action Description Chief Eng	Sign & Date			

NOTE: Date & initial all entries

H:\fFORMS\Quality Assurance\approved QA\NCRWO RevE

Work Order ID 81744

March-16-12 3:19:11 PM

81744

Item ID: D3687-3
Revision ID:
Item Name: MOUNT

Accept *N9000040100*

Setup Start *NS1*
Stop *NS2*

Start Date: 16/03/2012 **Start Qty:** 8.00 *8*
Required Date: 23/04/2012 **Req'd Qty:** 8.00 *8*
Reference:

Cust Item ID:
Customer:

Run Start *NR1*
Stop *NR2*

Approvals: **Process Plan:** **Date:** **Tooling:** **Date:**
QC: **Date:** **SPC (Y/N):** **Date:**

Sequence ID/ Work Center ID	Operation Description	Set Up/ Run Hours	Tool ID	Tool #	Plan Code	Accept Qty	Reject Qty	Reject Number	Insp. Stamp
125 *125* Packaging Packaging	Receive & Inspect for Damage & Mat'l Certs	0.00							12/4/6
	Memo ENSURE NDT RESULT IS ATTACH	0.00							
127 *127* Small Fab Small Fab		0.00				8			12·06·06
	Memo CLEAN ALL PART FROM NDT TESTING RESIDUE	0.00							
128 *128* QC Quality Control	QC5- Inspect part completeness to step on W/O	0.00				8			12·06·06
	Memo	0.00							

Dart Aerospace Ltd

W/O:		WORK ORDER CHANGES					
DATE	STEP	PROCEDURE CHANGE	By	Date	Qty	Approval Chief Eng / Prod Mgr	Approval QC Inspector

Part No: _____ **PAR #:** _____ **Fault Category:** _____ **NCR:** Yes No **DQA:** _____ **Date:** _____

Resolution: _____ **Disposition:** _____ **QA: N/C Closed:** _____ **Date:** _____

NCR:		WORK ORDER NON-CONFORMANCE (NCR)						
DATE	STEP	Description of NC Section A	Corrective Action Section B			Verification Section C	Approval Chief Eng	Approval QC Inspector
			Initial Chief Eng	Action Description Chief Eng	Sign & Date			

NOTE: Date & initial all entries

H:\FORMS\Quality Assurance\approved QA\NCRWO RevE

Work Order ID 81744

March-16-12 3:19:11 PM

81744

Item ID: D3687-3
Revision ID:
Item Name: MOUNT

Accept *N9000040100*

Setup Start *NS1*
Stop *NS2*

Start Date: 16/03/2012 **Start Qty:** 8.00 *8*
Required Date: 23/04/2012 **Req'd Qty:** 8.00 *8*
Reference:

Cust Item ID:
Customer:

Approvals: **Process Plan:** **Date:** **Tooling:** **Date:**
QC: **Date:** **SPC (Y/N):** **Date:**

Run Start *NR1*
Stop *NR2*

Sequence ID/ Work Center ID	Operation Description	Set Up/ Run Hours	Tool ID	Tool #	Plan Code	Accept Qty	Reject Qty	Reject Number	Insp. Stamp
130	Identify as per dwg & Stock Location: GA	0.00							
130 Packaging						8		Suc	12/06/06
Packaging	Memo	0.00							
140	QC21- Final Inspection - Work Order Release	0.00							
140 QC							12/6/79		
Quality Control	Memo	0.00							

MLJ 12/06/06

Dart Aerospace Ltd

W/O:		WORK ORDER CHANGES					
DATE	STEP	PROCEDURE CHANGE	By	Date	Qty	Approval Chief Eng / Prod Mgr	Approval QC Inspector

Part No: _____ **PAR #:** _____ **Fault Category:** _____ **NCR:** Yes No **DQA:** _____ **Date:** _____

Resolution: _____ **Disposition:** _____ **QA: N/C Closed:** _____ **Date:** _____

NCR:		WORK ORDER NON-CONFORMANCE (NCR)						
DATE	STEP	Description of NC Section A	Corrective Action Section B			Verification Section C	Approval Chief Eng	Approval QC Inspector
			Initial Chief Eng	Action Description Chief Eng	Sign & Date			

NOTE: Date & initial all entries

H:\fFORMS\Quality Assurance\approved QA\NCRWO RevE

Picklist Print

March-16-12 3:19:15 PM

Work Order ID: 81744

81744

Parent Item: D3687-3

D3687-3

Parent Item Name: MOUNT

Start Date: 16/03/2012 **Required Date:** 23/04/2012

Start Qty: 8.00 **Required Qty:** 8.00

Comments: IPP Rev:A New Issue 08-01-15 JLM Verified By:EC
IPP Rev:B Added Contion H-900 JLM Verified By:DD IPP
REV:C ADDED QC6 10-09-09 JLM VERIFIED BY :DD

Component Item ID/ Item Name	Replacement Item ID	Mfg/ Purch	Bin Item	Primary Location	Last Location	Route Seq ID	Unit of Measure	Qty on Hand	Qty per Kit	Total Qty	Qty Issued	Date Issued	Status
M174PH-H900B3.937X4.750		Purchased	No			100	f	5.3000	0.3333	2.806737			
M174PH-H900B3.937X4.750									**	CL 12/03/20			
17-4SS Bar H900-3.937x4.750													
				Location		**Loc Qty**		**Loc Code**					
				MAT005		5.3							
					112374	5.3				2.807			
D3687-3P		Purchased	No			105	Each	0.0000	1	8			
D3687-3P									**	12/03/20			8
MOUNT													

Dart Aerospace Ltd

W/O:		WORK ORDER CHANGES					
DATE	STEP	PROCEDURE CHANGE	By	Date	Qty	Approval Chief Eng / Prod Mgr	Approval QC Inspector

Part No: _____ **PAR #:** _____ **Fault Category:** _____ **NCR:** Yes No **DQA:** _____ **Date:** _____

Resolution: _____ **Disposition:** _____ **QA: N/C Closed:** _____ **Date:** _____

NCR:		WORK ORDER NON-CONFORMANCE (NCR)						
DATE	STEP	Description of NC Section A	Corrective Action Section B			Verification Section C	Approval Chief Eng	Approval QC Inspector
			Initial Chief Eng	Action Description Chief Eng	Sign & Date			

NOTE: Date & initial all entries

H:\fFORMS\Quality Assurance\approved QA\NCRWO RevE

SHOP COPY
RETURN TO
ENGINEERING
UNCONTROLLED COPY
SUBJECT TO AMENDMENT
WITHOUT NOTICE
WORK ORDER
NO. 81744 MLS
12/03/19

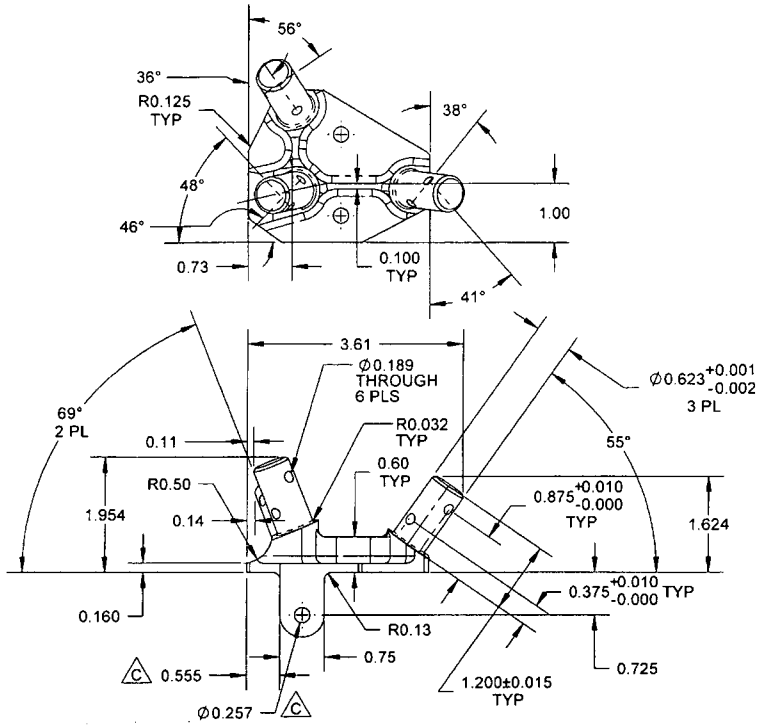

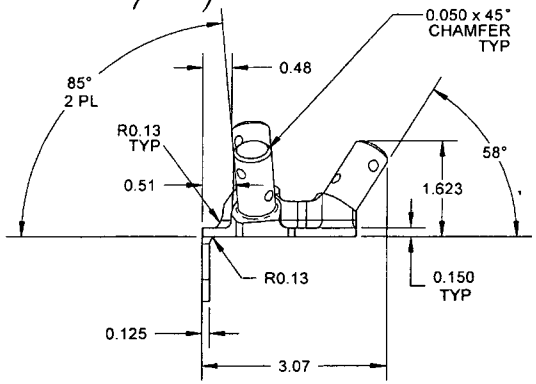

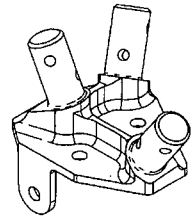

RELEASED
2009 -09- 22

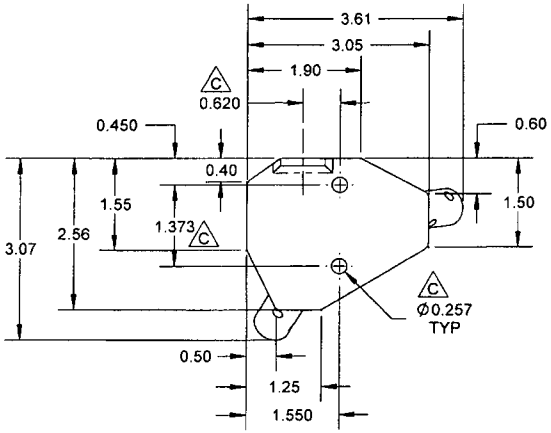

D3687-1 MOUNT

NOTES:
1) MATERIAL: 17-4PH SS BAR PER AMS 5643, H-900 CONDITION
2) FINISH: NONE
3) TOLERANCES: PER DART QSI 018 UNLESS OTHERWISE NOTED
4) UNITS: INCHES UNLESS OTHERWISE NOTED
5) BREAK SHARP EDGES: 0.005 TO 0.010 MAX
6) IDENTIFICATION: NONE
7) WEIGHT: 0.81 lb
C 8) LPI PER QSI 038 4.1.1 (ASTM E1417 LEVEL 2)

REV.	DESCRIPTION	BY	DATE
C	0.555 WAS 0.50 (ZN B8-1); 1.373 WAS 1.375 (ZN A8-1, A8-2); ADD 0.620 (ZN B7-1) PER NCR09-084; UPDATE NOTE 8 TO REF QSI (ZN A6-1, B3-2); Ø0.257 WAS Ø0.250 (ZN A6-1, B7-1, B7-2)	RF	09.08.26
B	CHANGE TO 17-4PH H-900 (ZN A6-1 & B3-2); R0.032 WAS R0.015 (ZN C7-1 & C7-2); REFORMATTED TO CURRENT DWG STANDARDS	RF	08.11.24
A	NEW ISSUE	RF	08.03.12

DESIGN	RF	DART AEROSPACE LTD HAWKESBURY, ONTARIO, CANADA	
DRAWN	RF	DRAWING NO.	REV. C
CHECKED		D3687	SHEET 1 OF 2
MFG. APPR.		TITLE	SCALE
APPROVED		MOUNT	NTS
DE APPR.			
DATE	09.08.26		

COPYRIGHT © 2008 BY DART AEROSPACE LTD
THIS DOCUMENT IS PRIVATE AND CONFIDENTIAL AND IS SUPPLIED ON THE EXPRESS CONDITION THAT IT IS NOT TO BE USED FOR ANY PURPOSE OR COPIED OR COMMUNICATED TO ANY OTHER PERSON WITHOUT WRITTEN PERMISSION FROM DART AEROSPACE LTD

Dart Aerospace Ltd

W/O:		WORK ORDER CHANGES					
DATE	STEP	PROCEDURE CHANGE	By	Date	Qty	Approval Chief Eng / Prod Mgr	Approval QC Inspector

Part No: _____ **PAR #:** _____ **Fault Category:** _____ **NCR:** Yes No **DQA:** _____ **Date:** _____

Resolution: _____ **Disposition:** _____ **QA: N/C Closed:** _____ **Date:** _____

NCR:		WORK ORDER NON-CONFORMANCE (NCR)						
DATE	STEP	Description of NC Section A	Corrective Action Section B			Verification Section C	Approval Chief Eng	Approval QC Inspector
			Initial Chief Eng	Action Description Chief Eng	Sign & Date			

NOTE: Date & initial all entries

H:\fFORMS\Quality Assurance\approved QA\NCRWO RevE

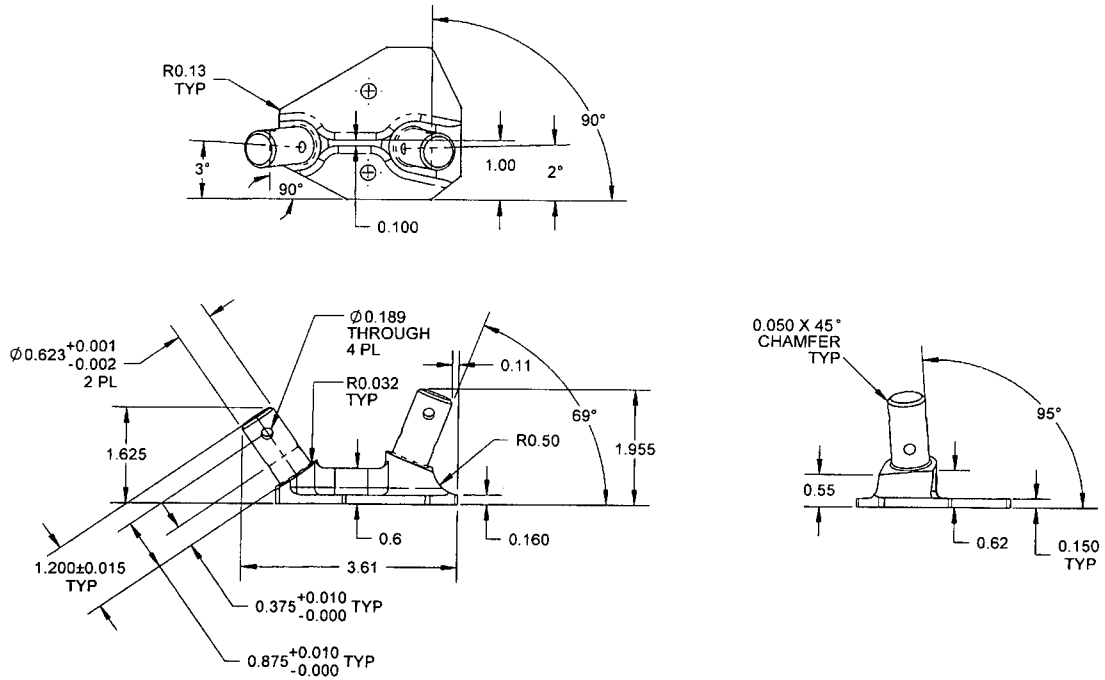

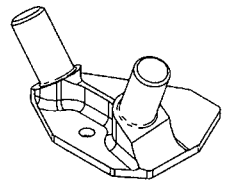

8744

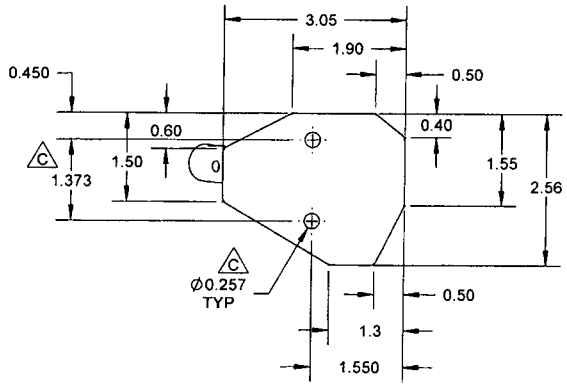

D3687-3 MOUNT

NOTES:
1) MATERIAL: 17-4PH SS BAR PER AMS 5643, H-900 CONDITION
2) FINISH: NONE
3) TOLERANCES: PER DART QSI 018 UNLESS OTHERWISE NOTED
4) UNITS: INCHES UNLESS OTHERWISE NOTED
5) BREAK SHARP EDGES: 0.005 TO 0.010 MAX
6) IDENTIFICATION: NONE
7) WEIGHT: 0.64 lb
C 8) LPI PER QSI 038 4.1.1 (ASTM E1417 LEVEL 2)

RELEASED
2009 -09- 22

DESIGN	RF	DART AEROSPACE LTD HAWKESBURY, ONTARIO, CANADA
DRAWN	RF	
CHECKED		DRAWING NO. D3687 — REV. C — SHEET 2 OF 2
MFG. APPR.		
APPROVED		TITLE MOUNT — SCALE NTS
DE APPR.		
DATE	09.08.26	

COPYRIGHT © 2008 BY DART AEROSPACE LTD
THIS DOCUMENT IS PRIVATE AND CONFIDENTIAL AND IS SUPPLIED ON THE EXPRESS CONDITION THAT IT IS NOT TO BE USED FOR ANY PURPOSE OR COPIED OR COMMUNICATED TO ANY OTHER PERSON WITHOUT WRITTEN PERMISSION FROM DART AEROSPACE LTD.

Dart Aerospace Ltd

W/O:		WORK ORDER CHANGES					
DATE	STEP	PROCEDURE CHANGE	By	Date	Qty	Approval Chief Eng / Prod Mgr	Approval QC Inspector

Part No: _____ **PAR #:** _____ **Fault Category:** _____ **NCR:** Yes No **DQA:** _____ **Date:** _____

Resolution: _____ **Disposition:** _____ **QA: N/C Closed:** _____ **Date:** _____

NCR:		WORK ORDER NON-CONFORMANCE (NCR)						
DATE	STEP	Description of NC Section A	Corrective Action Section B			Verification Section C	Approval Chief Eng	Approval QC Inspector
			Initial Chief Eng	Action Description Chief Eng	Sign & Date			

NOTE: Date & initial all entries

H:\fFORMS\Quality Assurance\approved QA\NCRWO RevE

Receiving Report

Date: 09/08/06 Batch No: M112374

Supplier: Magnu Dart P/O: 10117

Packing Slip: Yes ✓ No ___ Release Note Attached: Yes ___ No ___ N/A ___
Invoice: Yes ___ No ✓ Waybill Attached: Yes ___ No ___
Receipt: Cash ___ Cr ___ Shipment Complete: Yes ✓ No ___ N/A ___
QC6 Inspection S/ / N/A ___
Work Order 09/08/21 N/A ___

Discrepancies

Part Number	Description	Quantity Ordered	Quantity Received	Quantity Returned	Quantity Short	Comments

Initials of receiver (if shipment OK) Level 12 CZ

Production/Admin:
Date 08/09/19
Received/Costing RCP 10117
Initial CZ

Location _____

H:\FORMS\Purchasing\approved purch\RECREPORT Rev D

MAGNA

Magna Stainless
5775 Kieran St, Saint-Laurent QC H4S 0A3
Phone: (514) 339-1211 Watts: 1-800-363-6646 Fax: (514) 339-1105

INVOICE

 I014724

RECEIVED
JUL 31 2009

SOLD TO:

DART AEROSPACE LTD
1270 ABERDEEN STREET
HAWKESBURY , ON
K6A 1K7

SHIP TO:
METCOR
560 BOUL ARTHUR SAUVE
SAINT-EUSTACHE, QC
J7R 5A8
MTR:Y

INVOICE DATE:	07/27/09
ORDER DATE:	07/22/09
SHIP DATE:	07/27/09
ORDER NUMBER:	W016184
PURCHASE ORDER:	P010117

Currency	Sales Person	Ship Via	F.O.B.	Terms
CANADIAN DOLLARS	ERYCK BLAIS	NIR:R-557065-1	PREPAID	NET 30 DAYS

Ln.	Back Ordered	Ordered	Unit	Description	Shipped	Price Per	Value
				STAINLESS - LB			
		2	PC	17-4 PH 3.937 X 4.750 X 9' L029745 2 PC/1,201 LB PLEASE CUT BAR IN HALF	2 UN	4,310.00	8,620.00
				STAINLESS ROUNDS			
		4	PC	SRB 17-4 ANN 1" x R/L L025718 12'7" 4 PC/134 LB PLEASE CUT ALL INTO 4' LG PIECES PLUS DROPS MUST BE SPEC AMS 5643	4 UN	135.00	540.00
		2	PC	SRB 17-4 ANN 1-3/8" x R/L L029746 12'5" 2 PC/124 LB PLEASE CUT ALL INTO 4' LG PIECES PLUS DROPS MUST BE SPEC AMS 5643	2 UN	280.00	560.00

07/28/09 13:22:01

Merchandise:	9,720.00
Surcharges:	
No Tax Costs:	
GST	486.00
PSTQ	765.45
Total Due:	10,971.45

Title to the goods sent out on this invoice remains with Magna Stainless Div of CSM ULC until such time as this invoice has been paid in full. Unless otherwise noted terms are 30 days. Interest accrues on all overdue accounts at the rate of 1.5% per month compounded monthly.

Q.S.T. # 1213236471
G.S.T. # 881565899 RT0001

Purchase Order Receipt Listing

August 19, 2009 3:06:10 PM

All amounts are calculated in domestic currency.

All Vendors PO ID PO10117 All Receipt Dates All Line Item Types
All Item ID/GL/WOs All Rec. Employees All Currencies
Grouped by Vendor ID

Purchase Order ID/ Curr Type	Line Nbr/ Insp Req	Project ID	Reference/ Description/ Cert Std	PO U/M / Stock U/M	Required Date Required Qty	Recv Date/ Recv Emp	Recv Qty (PO U/M)	Cost Per Unit/ Recv Value	Inspected Qty/ Rejected Qty (PO U/M)	MRB Qty/ MRB Reject Qty	Book Amt
VendorID\Vendor Name		**VC-MAG002**	**Magna Stainless**								
PO10117	1		M174PH-H900B3.937X4.750	f	7/27/09	8/19/09	19.0277	$478.89	0.0000	0	$9,112.18
CAD	No		17-4SS Bar H900-3.937x4.750 112374	f	18.0000	LAVO01		$9,112.18	0.0000	0	
	2		M174PH-H900R1.000	f	7/22/09	8/19/09	44.0000	$13.50	0.0000	0	$594.00
	No		17-4SS H900 ROUND BAR 1.00 112374	f	40.0000	LAVO01		$594.00	0.0000	0	
	3		M174PH-H900R1.375	f	7/22/09	8/19/09	24.0000	$28.00	0.0000	0	$672.00
	No		17-4 SS H900 ROUND BAR 1.375 112374	f	20.0000	LAVO01		$672.00	0.0000	0	

Total Received Quantity:	87.0277
Total Qty to Inspect (PO U/M):	0.0000
Total Reject Quantity:	0.0000
Total Receipt Value:	$10,378.18
Total Balance Due Quantity:	0.0000

MAGNA

Magna Stainless
3775 Kieran St. Saint-Laurent, Quebec H4S 0A3
Phone (514) 339-1211 Waits 1-800-363-6646 Fax (514) 339-1105

PACKING LIST

1004724
Page 1 of 1

SOLD TO:
DART AEROSPACE LTD
1270 ABERDEEN STREET
HAWKESBURY
K6A 1K7
Contact: LINDA

ON

SHIP TO:
METCOR
560 BOUL ARTHUR SAUVE
SAINT-EUSTACHE, QC
J7R 5A8
Ship Terms: PREPAID

MAGNA QC

SPECIAL INSTRUCTIONS

Currency	Sales Person	Customer Phone	Customer Fax	Customer PO
CANADIAN DOLLARS	FRYCK BLAIS	(613) 632-5200	(613) 632-1052	P010417

Sales Order	Terms	Ship Via	Date Ordered	Date Required	Date Shipped
W016184	NET 30 DAYS	NIRSR-557065-1	07/22/09	07/27/09	07/27/09

Ordered	Back Ordered	Unit	Description	Bundle #	Heat #	Shipped
2		PC	STAINLESS - LB 27-4 PH 1.937 X 4.750 X 9 201 LB / 2 PC PLEASE CUT BAR IN HALF	L029745	1[illegible] ~~[illegible]~~	2 2
4		PC	STAINLESS ROUNDS SRB 17-4 ANN 1 X R/L 12 7' 134 LB / 4 PC PLEASE CUT ALL INTO 4' LG PIECES PLUS DROPS MUST BE SPEC AMS 5643	L025718	247478	4 4
2		PC	SRB 17-4 ANN 1.378 X R/L 12 7' 134 LB / 2 PC PLEASE CUT ALL INTO 4' LG PIECES PLUS DROPS MUST BE SPEC AMS 5643	L029746	G13282	2 2

Total Weight 1,459 LB

Received by: [illegible] Date: [illegible] Signature:

DART aerospace

Dart Aerospace Ltd.
1270 Aberdeen Street
Hawkesbury, ON K6A 1K7
Tel: 613 632 9577
Fax: 613 632 1053

PO REPRINT

Purchase Order ID PO10117

Purchase Order Date 7/22/09
PO Print Date 7/22/09

Page Number 1 of 1

Order From : VC-MAG002

MAGNA STAINLESS
5775 RUE KIERAN
ST LAURENT, QC H4S 0A3
CA

Contact Name
Vendor Phone 800 363 6646
Vendor Fax 514 339 1105
Vendor Account Nbr

Buyer
Requisition Nbr
Tax Resale Nbr 10127-2607
Terms Net 30
Currency CAD
FOB

Ship To : DART AEROSPACE LTD 1270 ABERDEEN
HAWKESBURY, ON K6A 1K7
CANADA

Line Nbr	Reference / Revision ID / Vendor Part Number	Description/ Mfg ID	Req Date/ Taxable	Req. Qty/ Unit of Measure	Ship Method	Unit Price	Extended Price
1	M174PH-H900B3.937X4.750 CL09108/07	17-4SS Bar H900-3.937x4.750 3.9x4.810	7/27/09 Yes	18.00 f	Epic collect	$478.8900	$8.620.02
2	M174PH-H900R1.000 rec'd 48 CL09108/07	17-4SS H900 ROUND BAR 1.000 44' total	7/22/09 Yes	40.00 f	Epic collect	$13.5000	$540.00
3	M174PH-H900R1.375 rec'd 24 CL09108/07	17-4 SS H900 ROUND BAR 1.375 24' total	7/22/09 Yes	20.00 f	Epic collect	$28.0000	$560.00

09.08.07 → 19.25' total 3x58" 1x57" long

Special Inst: ALL ABOVE: 17-4PH cond. H900
PER AMS 5643
PLEASE SHIP ALL ABOVE TO
METCOR INC
560 BOUL. ARTHUR SAUVE
SAINT-EUSTACHE, QC
J7R 5A8 (450-491-5498)
SHIP VIA EPIC EXPRESS OUR
ACCT # 4300450343

POSITIVE RECALL
EFFECTIVE 9.08.07 AUTH
RELEASED DATE 9.08.07

MATERIAL CERTIFICATION REQ'D UPON DELIVERY

POSITIVE RECALL

PO Total: $9,720.02

No substitution or deviation without consent.
Certificate of Conformity or Material Certification required when applicable

Change Nbr: 2 **Change Date:** 7/22/09

Metcor Inc.

Metcor Inc.
560, boul. Arthur-Sauvé
St-Eustache (Québec) J7R 5A8
Tél.: (450) 473-1884
Fax Administration: (450) 491-5498
Fax Production : (450) 491-6454

Rapport d'inspection

Order	Load
149974	1

Customer 215
DART AEROSPACE
1270 ABERDEEN
HAWKESBURY ON K6A 1K7

Shipped To:
DART AEROSPACE
1270 ABERDEEN
HAWKESBURY ON K6A 1K7

Customer PO / PO du Client	Customer Shipper No.	Material Type / Material	Mat'l Heat Code	Lot Number
10128		17-4PH		

PROCESSING SPECIFICATIONS

AGE HARDEN
CONDITION H900
SAE AMS 2759/3 REV E

Requirement	Specified	Tests Performed	Test Results
HARDNESS	40 - 47 HRC	28	43 - 45 HRC

Quantity	Weight	Part Number / Part Description
28	1447	BARRE RONDE 8 BARRES DE 7" + 18 BARRES DE 46" BAR 1" & 1.375" BARRE CARREE 4 BARRES DE 58" BAR 3.937 X 4.750 1 PALETTE

COMMENTS

INSPECTOR: METCOR 7

DATE: 2009-08-04

FACSIMILE TRANSMITTAL

MAGNA INOXYDABLE INC.

TO/À: Chantal

FAX #: (613) 632 - 1053

CO: Dart Aerospace

DATE: Aug. 20/09

RE: PO # 10117

PAGES: 6 + COVER + COUVERTURE

FROM/DE: BARRY MARTIN

QUALITY MANAGER/GÉRANT À LA QUALITÉ

PHONE: (514) 339-1211
FAX: (514) 335-2202
E-MAIL: bmartin@magnastainless.com

ACERALAVA

MILL CERTIFICATE OF QUALITY

EN 10204 3.1.B
EN 10204 3.1.B

PRINTED ON:10.02.2006
NUMBER:232011 Rev:000
SHEET..:1 / 1
DATE...:10.02.2006

CUSTOMER.....: PURCHASE ORDER: AC0835

MATERIAL SPECIFICATION: QAD 29 REV.3 GRADE.....: 17/4PH ASTM A564 ASTM A705

FURNACE METHOD:.....: BASIC ELECTRIC FURNACE + A.O.D QUA REFERENCE.: 22198

ITEM	SIZE	LENGTH	HEAT	NOM.	MEASURE
2	150MM SQ	4.000 / 6.000 MT.	36279	6	3920 KG
3	200MM SQ	4.000 / 6.000 MT.	36279	4	3920 KG

CHEMICAL COMPOSITION (*2 2s ZAPKEY Cr PROPERT)

*1 HEAT	C	Mn	Si	P	S	Ni	Cr	Mo	Al	Cu	Co
36279	0,052	0,60	0,250	0,025	0,0010	4,05	15,53	0,22	0,002	3,20	0,010
*2 36279	V	Ti	Nb	N	B	Cp	Ca	As	Ta	H	
	0,043	0,003	0,130	0,0021	0,020	0,055	0,0007	0,007	0,010	0,0165	

MECHANICAL TESTING

HEAT	ITEM	TEMP (°C)	TENSION TEST Rp 0,2%	Rp 1,0%	Rm	Elo	RA%	HARDNESS (HRC) MIN.	MAX.
36279	2	RT						30	31
36279	3	RT						28	29

SURFACE FINISH
ITEM 2 FULLY SURFACE GROUND
ITEM 3 FULLY SURFACE GROUND

HEAT TREATMENT
FULLY ANNEALED

OTHER REMARKS
THIS MATERIAL WAS MANUFACTURED ACCORDING OUR QUALITY SYSTEM APPROVED AND REGISTERED TO ISO 9001.

ULTRASONIC TESTED ACCORDING TO

ITEM	CLASS	STANDARD
2	FSH-6	A-380/A-745 GL2
3	FSH-6	A-380/A-745 GL2

SPECIFICATION CHECKED BY TONY HARRISON, AND IS IN ACCORDANCE WITH OUR PURCHASE ORDER

DATE REGISTERED 7/4/06

SIGNED:

AENOR ER Gestión Medioambiental EA-00/0103
IQNet
AENOR Gestión Calidad ER-0001/93

ACERALAVA
ACERIA DE ALAVA, S.A.
Director de Calidad e I+D

Javier Valle Echavarria

CD-119

M023189

Dart Aerospace Ltd.
1270 Aberdeen Street
Hawkesbury, ON K6A 1K7
Tel: 613 632 9577
Fax: 613 632 1053

PURCHASE ORDER

Purchase Order ID PO16478

Purchase Order Date 3/19/12
PO Print Date 3/19/12

Order From : VC-GLO001

ARCHER PRECISION INC.
36 COLONNADE RD. N.
NEPEAN, ON K2E 7J6
CA

Contact Name		**Buyer**	Chantal Lavoie
Vendor Phone	613 226 1579	**Requisition Nbr**	
Vendor Fax	613 226 1719	**Tax Resale Nbr**	10127-2607
Vendor Account Nbr		**Terms**	Net 30
		Currency	CAD
		FOB	Destination-Collect

Ship To : DART AEROSPACE LTD 1270 ABERDEEN
HAWKESBURY, ON K6A 1K7
CANADA

FAXED

Line Nbr	Reference / Revision ID / Vendor Part Number	Description/ Mfg ID	Req Date/ Taxable	Req Qty/ Unit of Measure	Ship Method	Unit Price	Extended Price
1	D3687-1P	MOUNT	4/11/12 Yes	4.00 Each	FedEx PI collect	$441.7000	$1,766.80
		Special Inst:	AS PER DWG D3687 REV. C B81748				
2	D3687-3P	MOUNT	4/11/12 Yes	8.00 Each	FedEx PI collect	$321.5010	$2,572.01
		Special Inst:	AS PER DWG D3687 REV. C B81744				
						PO Total:	**$4,338.81**

CERTIFICATE OF CONFORMITY
REQUIRED WITH DELIVERY

No substitution or deviation without consent.
Certificate of Conformity or Material Certification required when applicable

Change Nbr: 1 **Change Date:** 3/19/12

ARCHER PRECISION

2228 Gladwin Cresent
Ottawa, Ontario
K1B 4S6

Phone # 613-899-2405

Packing Slip

Date	Invoice #
16/05/2012	123

Ship To
Main Finished Goods Location Dart Aerospace 1270 Aberdeen Street Hawksbury, Ontario K6A 1K7

P.O. No.	Ship	Via	FOB	Project
16478	16/05/2012	Federal Express	Archer	

Qty	Item Code	Description
8	Sales	D3687-3P Mount Rev. C HST (ON) on sales

2228 Hadwin Cres
Ottawa, Ont.
K1B 4S6

Telephone (613) 899-2405
Fax (613) 226-1719

Certificate of Compliance

To:
Dart Aerospace Ltd.
1270 Aberdeen Street
Hawkesbury Ont.
K6A 1K7

Po Number	Part Number	Quantities
16478	D3687-3P Rev. C	8

It is hereby certified that all articles mentioned above are in conformance with the requirements, specification and drawings as listed on customer purchase order number, 16478 issued by Dart Aerospace Inc.

Alex Mazerolle
President
Archer Precision Inc.
1393 Major Road,
Orleans Ontario
K1E 1H3

ARCHER PRECISION

Inspection Report

Customer Name	QTY	DWG #	REV.	Part Name	Date	Lot#	Job #
Dart Aerospace	8	D3687-3	C	Mount	May 16/2012		514-2

Page 1 of ____ | Inspection Interval | Special Notes

Item #	DWG. Dim	Tolerance	Operator First Off	QA First Off A	QA First Off R	QA Final A	QA Final R	2	3	4	5	6
	Rev	C	C	✓		✓						
	Mat	17-4	✓	✓		✓						
	SUB	None	✓	✓		✓						
	Deburr	Yes	✓	✓		✓						
1	R0.13	+/-.030	0.125	✓		✓						
2	3°	+/-.5°	PP	✓		✓						
3	90°	+/-.5°	PP	✓		✓						
4	0.100	+/-.010	0.104	✓		✓		0.104	0.104	0.103	0.104	0.104
5	1.00	+/-.010	1.001	✓		✓						
6	2°	+/-.5°	PP	✓		✓						
7	90°	+/-.5°	PP	✓		✓						
8	Ø.623	+.001/-.002	0.6235	✓		✓		0.623	0.6235	0.6235	0.623	0.6235
9	2PL	-	2x	✓		✓						
10	1.625	+/-.010	1.622	✓		✓						
11	1.200	+/-.015	1.198	✓		✓		1.201	1.200	1.201	1.201	1.201
12	0.375	+0.010/-0.000	PP	✓		✓						
13	3.61	+/-.030	3.613	✓		✓						
14	0.6	+/-.100	0.600	✓		✓						
15	0.160	+/-.010	PP	✓		✓						
16	1.955	+/-.100	1.956	✓		✓						
17	R0.50	+/-.030	PP	✓		✓						
18	69°	+/-.5°	PP	✓		✓						
19	0.11	+/-.030	PP	✓		✓						
20	R0.032	+/-.010	PP	✓		✓						
21	4PL		4X	✓		✓						
22	Ø0.189	+/-.010	0.189	✓		✓		0.189	0.189	0.189	0.189	0.189

Date of Issue July, 13, 2005.

QF24 Rev.2

23	0.050x45°		0.047 45°	✓		✓						
24	0.55	+/-.030	PP	✓		✓						
25	0.62	+/-.030	PP	✓		✓						
26	0.150	+/-.010	0.152	✓		✓		0.150	0.150	0.152	0.153	0.151
27	95°	+/-.5°	PP	✓		✓						
28	0.450	+/-.010	0.451	✓		✓						
29	1.373	+/-.010	1.374	✓		✓						
30	Ø0.257	+/-.010	0.258	✓		✓		0.257	0.257	0.257	0.257	0.257
31	1.550	+/-.010	1.551	✓		✓						
32	1.3	+/-.100	PP	✓		✓						
33	0.50	+/-.030	PP	✓		✓						
34	2.56	+/-.030	2.563	✓		✓						
35	1.55	+/-.030	PP	✓		✓						
36	0.40	+/-.030	PP	✓		✓						
37	0.50	+/-.030	PP	✓		✓						
38	1.90	+/-.030	PP	✓		✓						
39	3.05	+/-.030	3.053	✓		✓						
40	0.875	+0.010/-0.000	PP	✓		✓						
41	1.50	+/-.030	PP	✓		✓						
42	0.60	+/-.030	PP	✓		✓						
43												
44												
45												
46												
47												
48												
49												
50												

ARCHER PRECISION

Inspection Report

Customer Name	QTY	DWG #	REV.	Part Name	Date	Lot#	Job #
Dart Aerospace		D3687-3	C	Mount	May 16/2012		514-2

Page 1 of ____ | Inspection Interval | Special Notes

Item #	DWG. Dim	Tolerance	Operator First Off	QA First Off A	QA First Off R	QA Final A	QA Final R	7	8			
	Rev	C										
	Mat	17-4										
	SUB	None										
	Deburr	Yes										
1	R0.13	+/-.030										
2	3°	+/-.5°										
3	90°	+/-.5°										
4	0.100	+/-.010						0.104	0.104			
5	1.00	+/-.010										
6	2°	+/-.5°										
7	90°	+/-.5°										
8	Ø.623	+.001/-.002						0.6235	0.6235			
9	2PL	-										
10	1.625	+/-.010										
11	1.200	+/-.015						1.200	1.199			
12	0.375	+0.010/-0.000										
13	3.61	+/-.030										
14	0.6	+/-.100										
15	0.160	+/-.010										
16	1.955	+/-.100										
17	R0.50	+/-.030										
18	69°	+/-.5°										
19	0.11	+/-.030										
20	R0.032	+/-.010										
21	4PL											
22	Ø0.189	+/-.010						0.189	0.189			

Date of Issue July,13,2005.

QF24 Rev.2

23	0.050x45°											
24	0.55	+/-.030										
25	0.62	+/-.030										
26	0.150	+/-.010						0.151	0.152			
27	95°	+/-.5°										
28	0.450	+/-.010										
29	1.373	+/-.010										
30	Ø0.257	+/-.010						0.257	0.257			
31	1.550	+/-.010										
32	1.3	+/-.100										
33	0.50	+/-.030										
34	2.56	+/-.030										
35	1.55	+/-.030										
36	0.40	+/-.030										
37	0.50	+/-.030										
38	1.90	+/-.030										
39	3.05	+/-.030										
40	0.875	+0.010/-0.000										
41	1.50	+/-.030										
42	0.60	+/-.030										
43												
44												
45												
46												
47												
48												
49												
50												

Date of Issue July,13,2005.

ACUREN

LIQUID PENETRANT TEST REPORT

P- 12183

PAGE 1 OF 1

CLIENT	DART AEROSPACE	DATE	06/05/12
ATTENTION	LINDA LACELLE	TIME	AM ☑ PM ☐
ADDRESS	1220 ABERDEEN STR. HAWKESBURY, ON.	ACUREN JOB NO.	188-12-C0256
		PO/WO NO.	—
		WORK LOCATION	SAME
		ACCEPTANCE STD.	ASTM 1417/QSI-038 REV./DATE 2005
PROJECT	F.P.I. ON CROSS TUBES AND MACHINED PARTS		
ITEM(S) EXAMINED	10-MACHINED PARTS 6 - CROSS TUBES.		

JOB DESCRIPTION PROCEDURE NO. LT0002 REV./DATE 2008 TECHNIQUE NO. LT-TECH2 REV./DATE 2008

PART NO. SEE RESULTS MATERIAL S. STEEL AND ALUMINE ALUMINUM THICKNESS VARIOUS

SCOPE A WET FLOURESCENT LIQUID PENETRANT WAS COMPLETED 100% EXTERNAL SURFACE —

TEST DETAILS

METHOD	☑ FLUORESCENT ☐ VISIBLE	☑ WATER WASH	☐ SOLVENT REMOVABLE ☐ POST EMULSIFIED
FAMILY BRAND	MAGNAFLUX	BLACK LIGHT S/N 16459	☐ OUTPUT > 1000 μ W/CM² ☐ AMBIENT < 2 fc
PENETRANT	ZL67 MINIMUM DWELL TIME 45 15 MIN.	LIGHTING EQUIP.	☐ FLASHLIGHT ☐ TROUBLELIGHT ☐ OUTPUT>100 fc @ SURFACE
PENETRANT REMOVER	H2O MINIMUM DRY TIME >10 MIN.	OTHER	LABINO
DEVELOPER	SKD S2 MINIMUM DWELL TIME 10 MIN.	LIGHT METER S/N 1098866	CAL DUE DATE Jul 4 28 2012
DEVELOPER TYPE	☑ NON AQUEOUS ☐ AQUEOUS ☐ DRY		

TEST SURFACE

SURFACE CONDITION	☐ AS GROUND	☐ AS WELDED	☑ MACHINED	☐ SHOT BLASTED	☑ CLEAN BARE METAL
SURFACE TEMPERATURE	☐ < - 4°C/ 20°F	☐ - 4°C/ 20°F TO 10°C/50°F		☑ 10°C/50°F TO 52°C/125°F	☐ > 52°C/125°F

RESULTS- (☑ METRIC ☐ IMPERIAL)

MACHINED PARTS

8 - W.O. # 81744 ✓
2 - W.O. # ~~84622~~ ✓

CROSS TUBES

1 - W.O. # 83081 ✓
1 " 83086 ✓
1 " 83085 ✓ → REGRIND 1 TIME
1 " 82280 ✓
1 " 83061 ✓
1 " 82279 ✓ → REGRIND 1 TIME

Scope of Services
The agreement of Acuren Group Inc. to perform services extends only to those services provided for in writing. Under no circumstances shall such services extend beyond the performance of the requested services. It is expressly understood that all descriptions, comments and expressions of opinion reflect the opinions or observations of Acuren Group Inc. based on information and assumptions supplied by the owner/operator and are not intended nor can they be construed as representations or warranties. Acuren Group Inc. is not assuming any responsibilities of the owner/operator and the owner/operator retains complete responsibility for the engineering, manufacture, repair and use decisions as a result of data or other information provided by Acuren Group Inc. In no event shall Acuren Group Inc.'s liability in respect of the services referred to herein exceed the amount paid for such services.
Standard of Care
In performing the services provided, Acuren Group Inc. uses the degree, care and skill ordinarily exercised under similar circumstances by others performing such services in the same or similar locality. No other warranty, expressed or implied, is made or intended by Acuren Group Inc.

SIGNATURES

CLIENT REPRESENTATIVE	Matthew Murdoch (PRINT)	Matthew Murdoch (SIGNATURE)	DTR # E63923
TECHNICIAN (SIGNATURE):			REPORT REVIEWED BY:
NAME (PRINT):	Mike Johnston		NAME INITIALS
	1ST TECHNICIAN	2ND TECHNICIAN	
	CGSB LEVEL II SNT LEVEL II	CGSB LEVEL ___ SNT LEVEL ___	
	CGSB REG. NO 6606	CGSB REG. NO ___	

WHITE – CLIENT COPY CANARY – OFFICE COPY PINK – TECHNICIAN COPY GOLD – OFFICE COPY